STI Tac Master - 17181

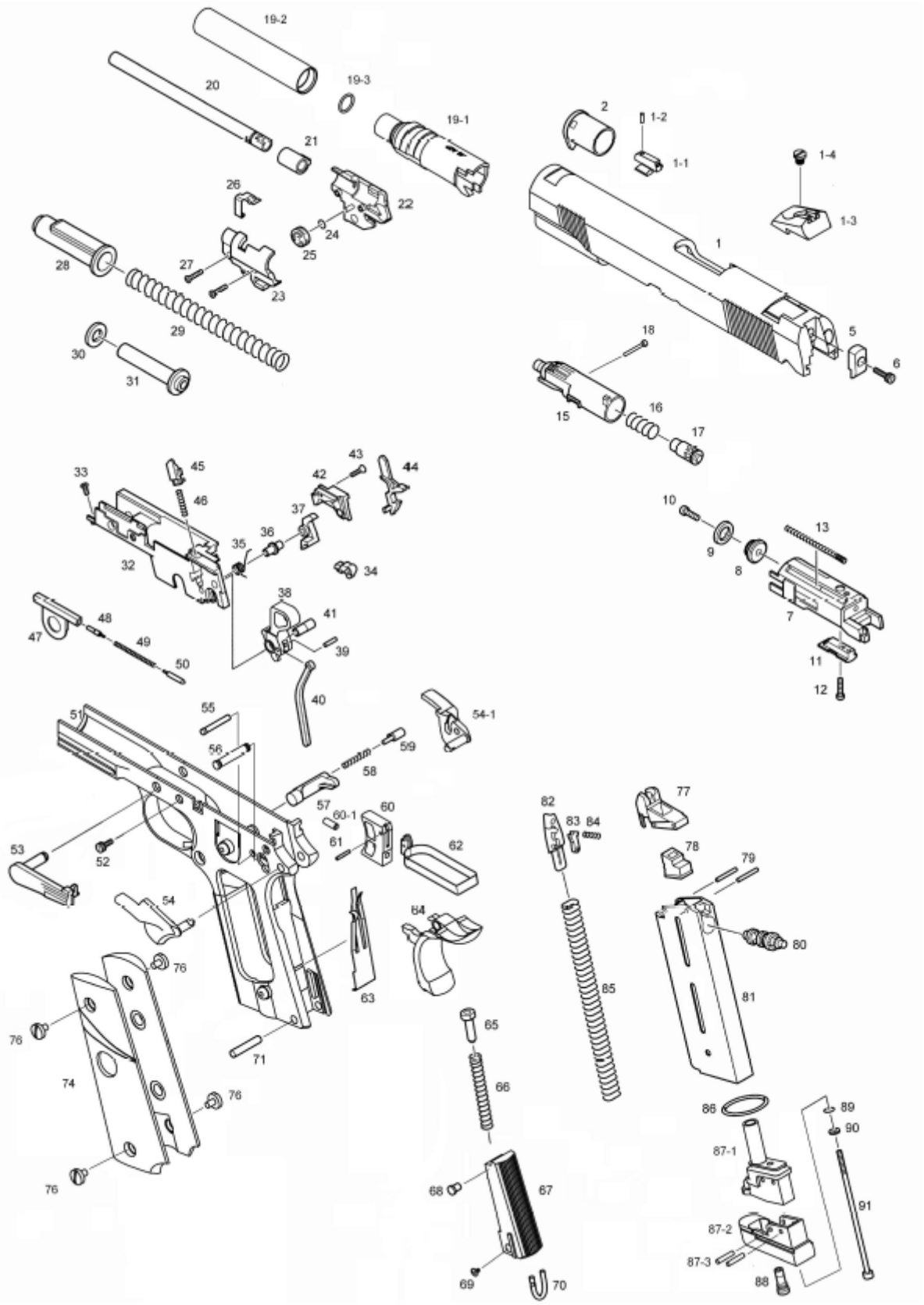

ActionSportGames ® A/S

Bakkegaardsvej 304
DK-3050 Humlebaek
Denmark

Phone: +45 8928 1888
Fax: +45 4919 3160
www.actionsportgames.com

STI Tac Master - 17181

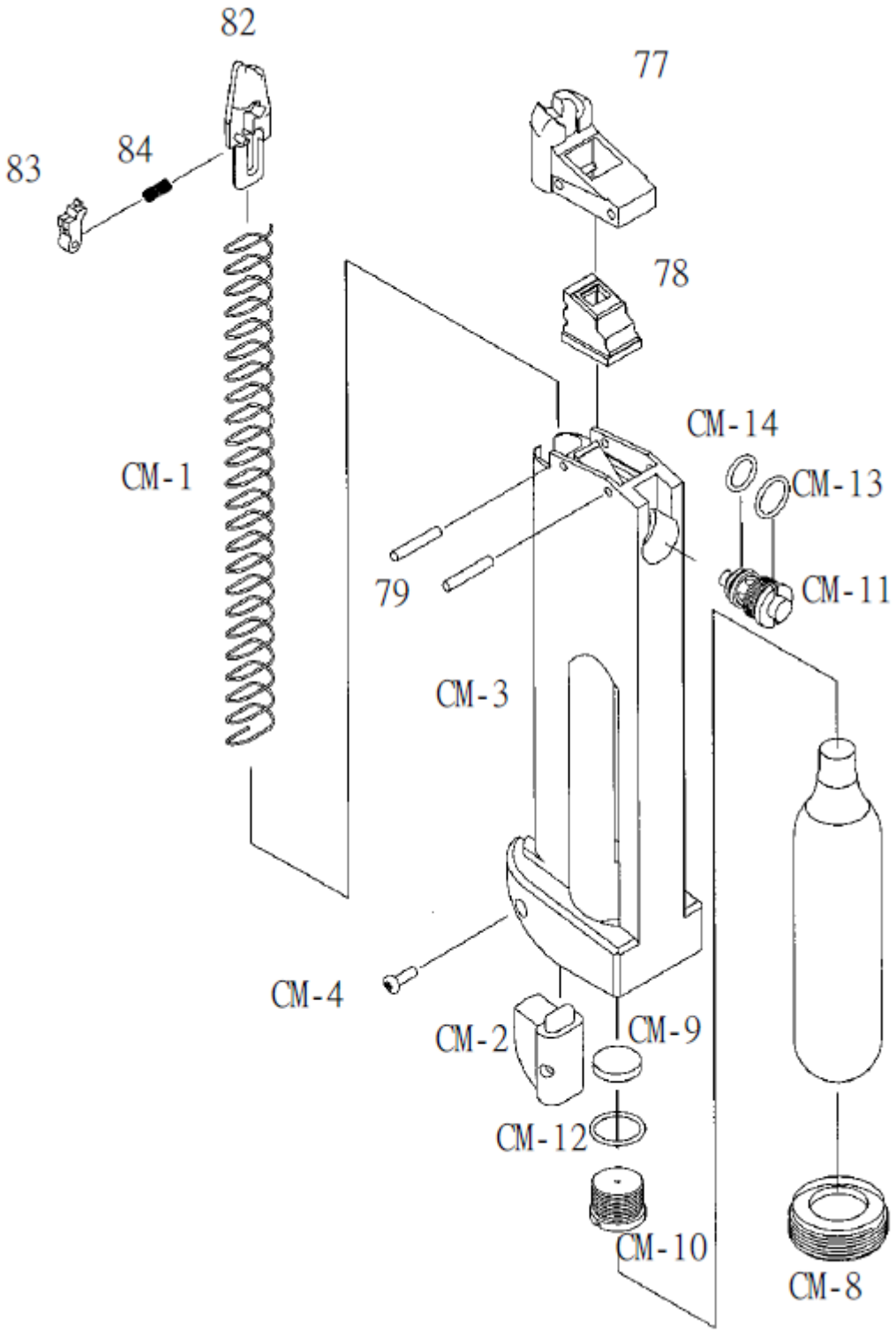

ActionSportGames ® A/S
Bakkegaardsvej 304
DK-3050 Humlebaek
Denmark
Phone: +45 8928 1888
Fax: +45 4919 3160
www.actionsportgames.com